2 615 000 219
Stand ~~98-08~~
Issue 98-09-28

**Fig./Abb. 1**

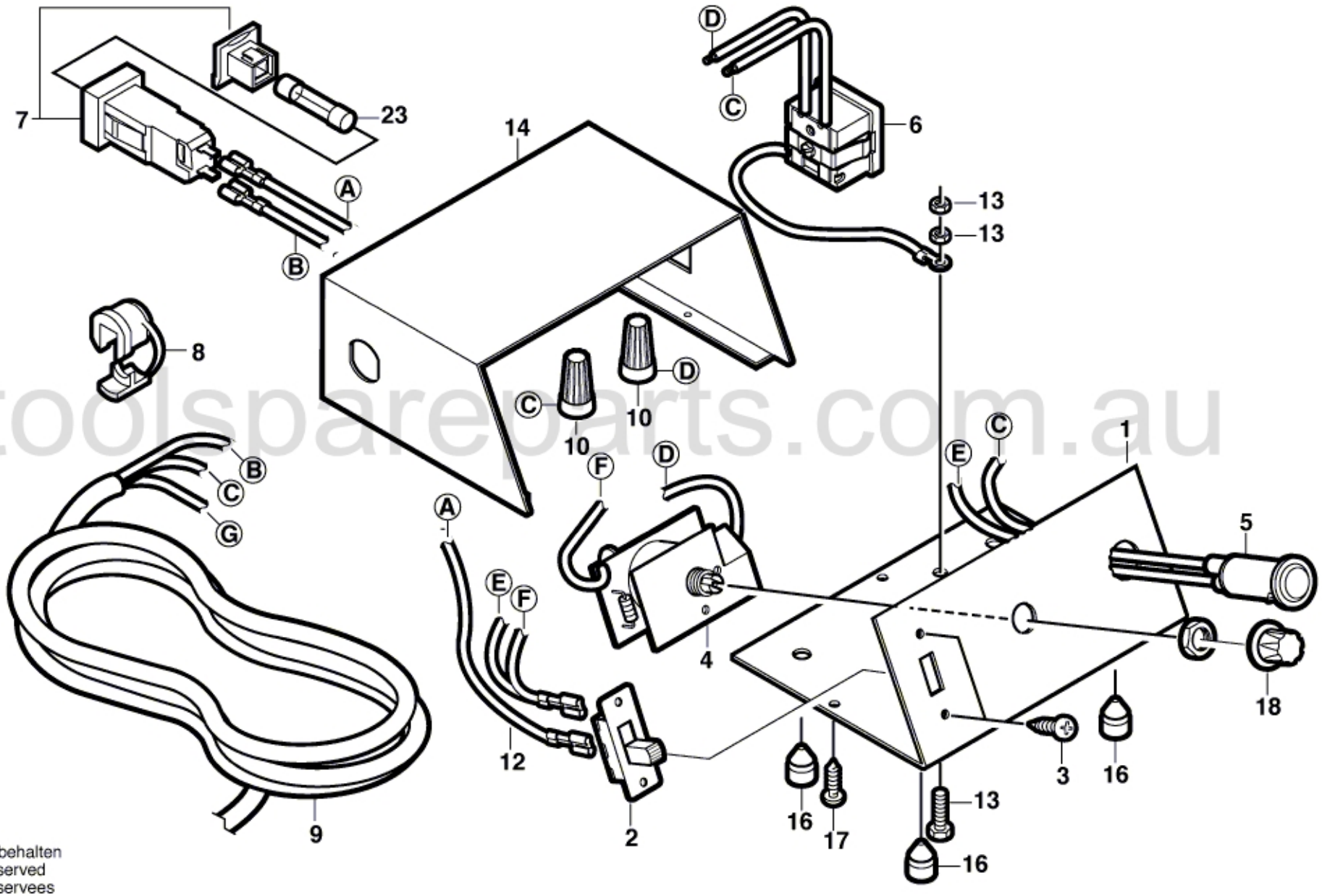


toolspareparts.com.au

Änderungen vorbehalten
Modifications reserved
Modifications reservees
Salvo modificaciones